Outline Dimension

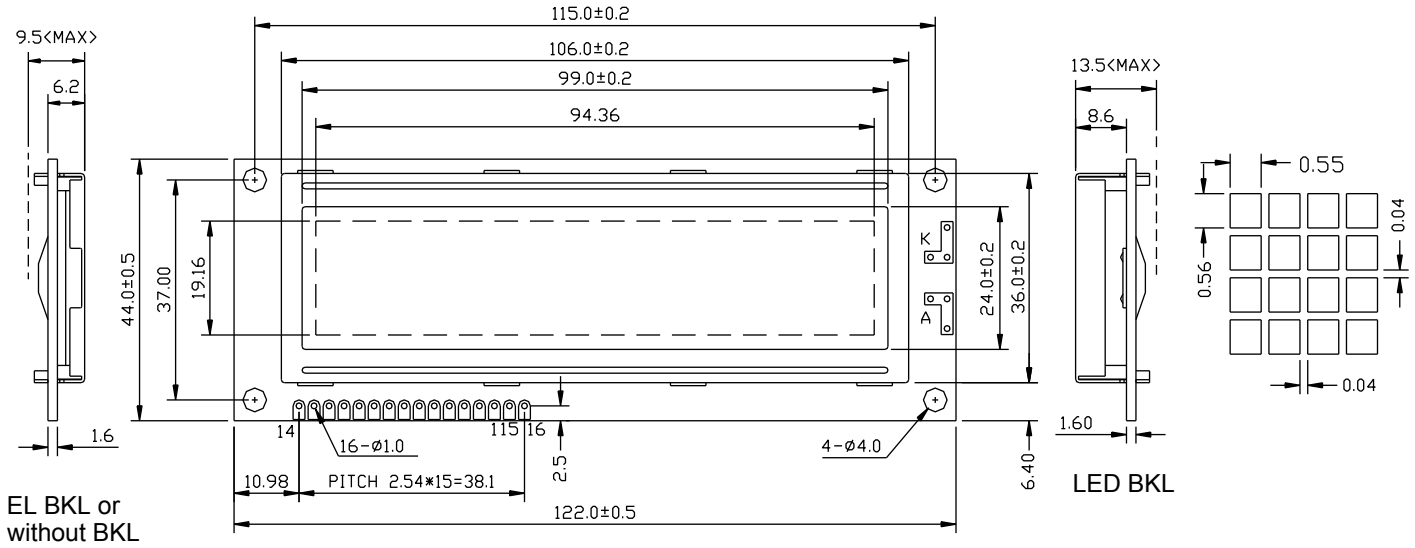

Block diagram

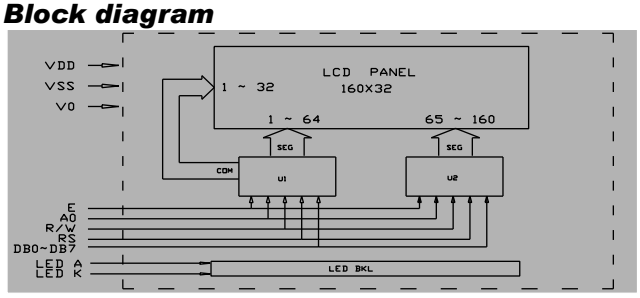

Feature

1. 160X32 dots with 8192 chinese character fonts (16x16)
2. 128 alpha-numerical fonts (16x8)
3. 64X256 bit graphic display RAM
4.Strong display control fuctions:
Vertical scroll, horizontal bit scroll,line reverse etc
5. +2.7~+5.5V power supply
4. STN; 1/32 duty; LED BKL or EL BKL
7. 4bit,8bit,serial interface

Interface pin connections

PIN NO	Symbol	Function
1	VSS	GND
2	VDD	+5V
3	V0	Constrast adjustment
4	RS	H/L Register select signal
5	R/W	H/LRead/Write signal
6	E	H/L Enable signal
7 to 14	DB0 to DB7	H/L Data bus line
15	A	+4.2V for BKL
16	K	Power supply for BKL

Mechanical Data

Item	Standard	Unit
Module dimension	122.0x44.0	mm
Viewing area	99.0x24.0	mm
Dot size	0.55x0.56	mm
Dot pitch	0.59x0.60	mm

Absolute Maximum Rating

Item	Symbol	Standard			Unit
		Min	Typ	Max	
Power supply	VDD-VSS	-0.3	--------	7.0	V
Input voltage	VI	-0.3	--------	VDD+0.3	

Electronical characteristics

Item	Symbol	Condition	Standard			Unit
			Min	Typ	Max	
Input voltage	VDD	+5V	4.7	5.0	5.5	V
		+3.3V	2.7	3.0	5.3	V
Supply current	IDD	VDD=5V	------	2	4	mA
Recommended LCD riling voltage for normal temp version module	VDD-V0	-20ºC	------	------	------	V
		0 ºC	4.7	5.0	5.5	
		25ºC	4.3	4.5	4.7	
		50ºC	4.1	4.3	4.5	
		70ºC	------	-------	------	
LED forward voltage	VF	25ºC	------	4.2	4.6	V
LED forward current	IF	25ºC	------	340	------	mA
EL power supply current	IEL	VEL=110V AC 400Hz	-----	-------	------	mA

Display character address code:

Display position

	1	2	3	4	5	6	7	8	9	10
DDRAM address	80	01	02	---	---	---	---			0AH
DDRAM address	90	91	92	---	---	---	---			9AH