Outline Dimension

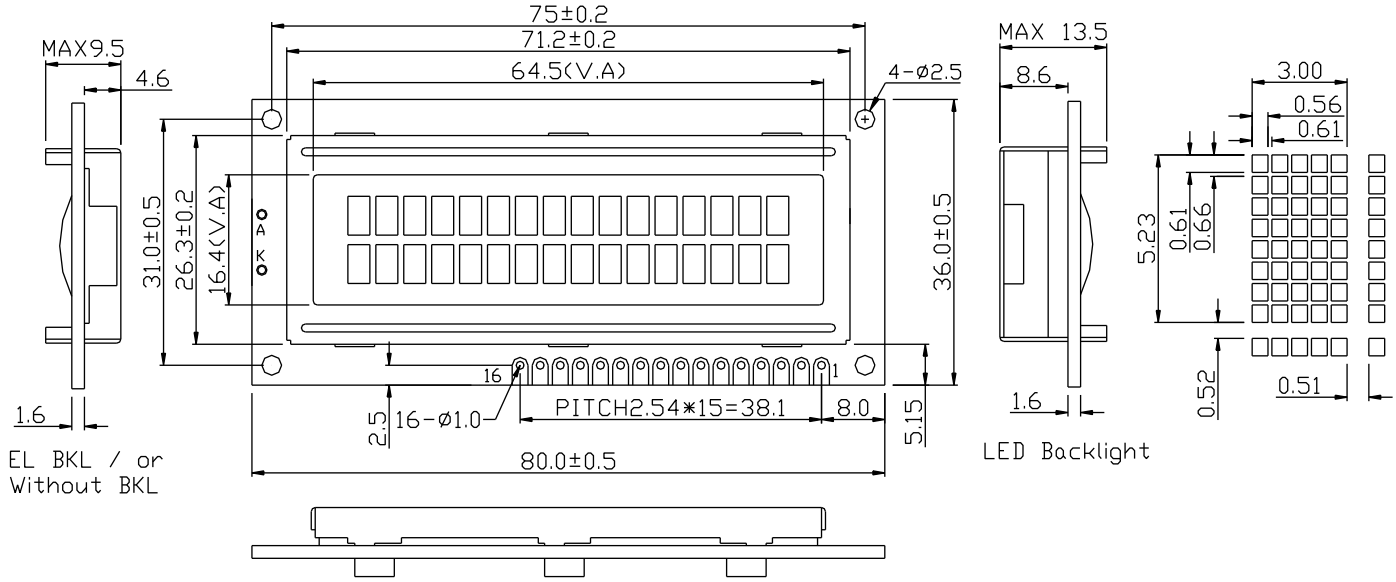

Feature

1. 5X8 dots with cursor
2. Built-in controller (KS0066U or Equivalent)
3. +5V power supply(Also available for +3.0V)
4. 1/8 duty cycle
5. BKL to be driven by pin1,pin2,or pin15,pin16 or A,K
6. N.V.optional

Interface pin connections

PIN NO	Symbol	Function
1	VSS	Power supply
2	VDD	
3	V0	Contrast adjustment
4	RS	H/L Register select signal
5	R/W	H/L Read/Write signal
6	E	H/L Enable signal
7	DB0	H/L Data bus for 4 bit or 8 bit mode
8	DB1	
9	DB2	
10	DB3	
11	DB4	
12	DB5	
13	DB6	
14	DB7	
15	LED+	+4.2V for BKL
16	LED-	Power supply for BKL(0V)

Mechanical Data

Item	Standard	Unit
Module dimension	84.0x36.0	mm
Viewing area	64.5x16.4	mm
Dot size	0.56x0.61	mm
Character size	3.00x5.26	mm

Absolute Maximum Rating

Item	Symbol	Standard			Unit
		Min	Typ	Max	
Power supply	VDD-VSS	-0.3	--------	5.5	V
Input voltage	VI	-0.3	--------	VDD	

Electronical characteristics

Item	Symbol	Condition	Standard			Unit
			Min	Typ	Max	
Input voltage	VDD	+5V	4.5	5.0	5.5	V
		+3.3V	2.7	3.0	3.3	V
Supply current	IDD	VDD=5V	------	1.5	3.0	mA
Recommended LCD driving voltage for normal temp version module	VDD-V0	-20ºC	------	------	------	V
		0 ºC	4.7	4.7	5.0	
		25ºC	4.3	4.5	4.7	
		50ºC	4.1	4.3	4.5	
		70ºC	------	-------	------	
LED forward voltage	VF	25ºC	------	4.2	4.6	V
LED forward current	IF	25ºC	------	120	------	mA
EL power supply current	IEL	VEL=110V AC 400Hz	-----	-------	------	mA

Display character address code:

Display position

	1	2	3	4	5	6	7	8	9	10	11	12	13	14	15	16
DDRAM address	00	01	02	---	---	---	---	---								0FH
DDRAM address	40	41	42	---	---	---	---	---								4FH